Mining Excavator R 9100

Operating Weight with Backhoe Attachment:	108.500 kg / 239,200 lb
Operating Weight with Shovel Attachment:	112.500 kg / 248,000 lb
Engine Output:	565 kW / 757 HP
Bucket Capacity @ 1,8 t/m³ / 3,000 lb/yd³:	7,00 m³ / 9.2 yd³
Shovel Capacity @ 1,8 t/m³ / 3,000 lb/yd³:	7,00 m³ / 9.2 yd³

LIEBHERR

R 9100

Operating Weight with Backhoe Attachment:	108.500 kg / 239,200 lb
Operating Weight with Shovel Attachment:	112.500 kg / 248,000 lb
Engine Output:	565 kW / 757 HP
Bucket Capacity @ 1,8 t/m³ / 3,000 lb/yd³:	7,00 m³ / 9.2 yd³
Shovel Capacity @ 1,8 t/m³ / 3,000 lb/yd³:	7,00 m³ / 9.2 yd³

Productivity
Liebherr Mining Equipment enables superior productivity by loading and hauling maximum tonnage in the shortest amount of time.

Efficiency
Liebherr combines the proven capabilities of previous models with new features that improve operational efficiency.

Reliability
To maximize equipment reliability, Liebherr combines manufacturing expertise with monitoring and diagnostic capabilities.

Customer Support
Liebherr builds more than just mining equipment; Liebherr also builds customer partnerships.

Safety
Mining demands an ever-vigilant focus on safety, and Liebherr strictly adheres to industry standards. Liebherr equipment is designed to diminish risk even under the most extreme mining conditions.

Environment
Liebherr optimizes mining equipment for fuel economy, emission compliance, and extended service intervals.

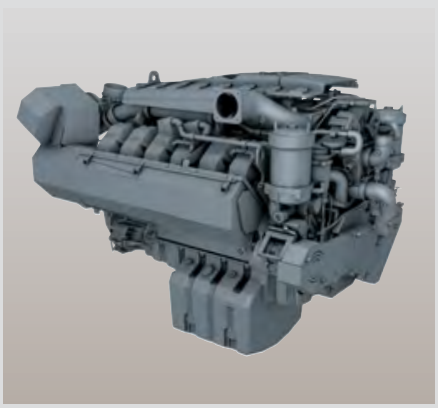

Liebherr Diesel Engine

- V12 by Liebherr
- USA/EPA Tier 2
- Fuel consumption optimized version (option)
- Automatic idle control
- Max. altitude without derating: 3.900 m
- Eco-Mode selector

Productivity

Efficient and effective by design, the R 9100 sets a new standard in job performance and functions as the optimal tool for loading 50 t up to 100 t dump trucks. Offering a high level of versatility the R 9100 opens up new opportunities for a wide range of excavating applications.

Engineered for Intense Mining

Powerful Drive System

The R 9100 is equipped with the long-lasting and proven Liebherr V12 diesel engine specifically designed to withstand extreme outside temperatures and high altitudes with low atmospheric pressure. Integrating the latest engine management system, the R 9100 is built for intense mining.

Optimized Cycle Times

Rather than using open hydraulic circuit, the R 9100 employs a closed-loop swing circuit to enable maximum swing torque while retaining the full oil flow for the working circuit. The independent swing circuit in combination with the powerful drive system leads to fast arm motion, which contributes to faster cycle times.

Easy Machine Control

The R 9100's hydraulic control system is optimized in order to improve combined machine motions. The ergonomically mounted joysticks on the suspended seat armrests allow the operator to precisely position the machine.

High Digging and Lifting Capabilities

High Digging Forces

Designed for the best mechanical force distribution, the production-tailored attachment delivers high digging and lifting forces. Integrating Liebherr-made cylinders and a wide range of buckets with mining-optimized GET, the R 9100's attachment ensures the highest forces, easy bucket penetration and high fill factor to perform even in the most demanding conditions.

Power-Oriented Energy Management

The R 9100's attachment is equipped with the pressureless boom down function to enable fast cylinder retraction without the need for pump energy. Intelligent energy management diverts the pump flow during boom lowering, allowing other cylinder motions to operate unimpeded.

Liebherr Site-Specific Bucket

- 4 to 5 passes to load a 50 t dump truck
- Three types of wear package
- Maximal bucket fill factor
- Integrated approach on machine capabilities
- Light weight bucket for max. loading capacities (option)

Liebherr Ground Engaging Tools (GET)

The new Liebherr Mining GET range is fully in line with the Liebherr buckets design, a synergy that enables easy material penetration while extending bucket steel structure lifetime:

- Three tooth profiles and five tooth sizes
- Innovative bucket lip and side wall protection
- One single locking system that limits tooling to one unique extraction tool
- Unique hammerless locking system
- Effortless and quick tooth removal

Machine Monitoring System

Integration of the Liebherr-made monitoring system also used on the R 9800:

- 10.5" LCD color 8-key screen
- Information interface to operator
- On-board diagnostics to service staff
- Real text information
- Long term data storage for maintenance

Efficiency

The R 9100 follows the Liebherr design philosophy of maximizing the machines performance by improving the efficiency of all individual subsystems. Engineered for optimum serviceability, the machine is designed to ensure maximum uptime. The R 9100's modern cab creates a comfortable working environment ensuring peak operator performance, every shift.

Optimized for Maximum Profitability

Electro-Hydraulic System Efficiency

Liebherr advanced hydraulic technology contributes to the R 9100's energy optimization. The high-pressure hydraulic system and the optimized pipe and hose layout maximize usable power transmission. The hydraulic pumps are electronically managed to provide optimal pressure compensation and oil flow management. The hydraulic system is independently regulated over the engine circuit for the best operational efficiency.

Cooling System Efficiency

The oversized independent oil- and water coolers in combination with low energy consumption fans and on-demand cooling controls enable to maximize available power for digging process.

Optimized Service Intervals

The R 9100's high pressure hydraulic oil filtration systems remove contaminants from the fluid to offer the highest rate of hydraulic system efficiency. To maintain the oil quality, all return hydraulic oil flow goes through a 15/5 µm fine filtration system. To promote availability, the grease tank and fuel tanks are sized to considerably extend the time between service intervals.

Modern Cab for Efficient Work

Superior Operator Comfort

The new and modern large cab which equips the Liebherr 100 t series offers ideal working conditions and optimal operator's comfort. Mounted on silent blocks, the R 9100's cab design reduces vibrations and limit noise pollution to provide a quiet environment.

Working Environment Total Control

Equipped with a large one-piece windscreen, the R 9100's cab offers a panoramic view over the entire machine and loading spot. Two outside cameras show areas that cannot be observed directly. Long-distance halogen working lights promote efficient loading.

1st-Class Service Arrangements

Service friendly design allows for easy and fast maintenance for maximum uptime:

- Service from one-side
- Large catwalk and walkway
- Refillable grease tanks instead of drums to be changed
- Centralized lubrication system (automatic in option)
- Enhanced single-line lubrication system

Comfort-Oriented Cab Design

An array of features:

- Tinted laminated safety glass
- Armored front window
- Adjustable air suspended seat
- A/C with dust filter in fresh air / recirculated
- Pressurization to prevent dust penetration (option)
- Operator Comfort Kit (option): sun blinds, bottle cooler, reading light, electronic operator weight adjustment

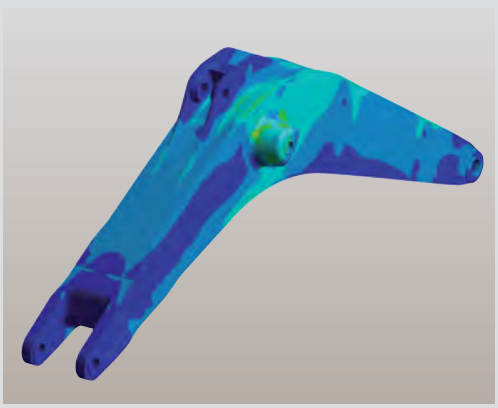

Numerical Structure Calculation

Capitalizing on past experiences while using modern tools for numerical structure calculation, Liebherr is able to provide customers with the most reliable solutions. The main computer-assisted tools for analysis used by Liebherr are:

- the Finite Element Analysis
- the Fatigue Life Analysis

Reliability

More than 50 years of hydraulic excavator design and manufacturing experience is the basis for the R 9100's outstanding reliability. The machine combines innovative technologies, design optimization and Liebherr components. Customers can expect durable performance from the R 9100 throughout the machine's life.

Quality: the Liebherr Trademark

Liebherr Vertical Integration

As an OEM, Liebherr has built a solid reputation for its development and production of high quality strategic mining components. The R 9100 integrates robust and reliable mining optimized components that are developed, manufactured and controlled by Liebherr ensuring reliability and high performance for the entire machine.

Machine Reliability Survey

Based on years of experience and the systematic measurement of key performance indicators of the machine behavior in the field, the Liebherr Mining Reliability Engineering Group is constantly seeking new ways to enhance reliability.

Quality Management Continuous Improvement

Liebherr quality begins during machine design and simulations. Liebherr meets the highest standards for special selections of steels and special casting materials. Based on the expertise of certified internal auditors and a highly qualified workforce, all manufacturing process steps are devised to provide the most comprehensive control, monitoring and traceability.

Long-lasting Job Performances

Maximized Component Lifetime

The R 9100 is equipped with a single line centralized lubrication system for the entire attachment and swing ring. All greasing points are suitably protected against external damages. This extends component life and ensures constant performance over the excavators' operational life.

Rugged Undercarriage Structure

The R 9100 is mounted on a heavy duty fatigue-resistant undercarriage and is equipped with the oversized proven track chain system from heavier Liebherr excavators. Designed and built for both shovel and backhoe configuration, the R 9100 provides the necessary stability and reliability.

Strenghtened Attachment Design

Backhoe or face shovel attachments are built to face all standard and specific applications:

- Use of advanced welding techniques
- Reinforced with strategically located castings in high stress areas
- Designed for maximum structure life
- Use of cutting-edge engineering tools

Liebherr Vertical Integration

Liebherr-made integrated parts are:

- Diesel engine
- Hydraulic pumps and motors
- Splitter box
- Electronic and control technology
  - Control and regulation electronics
  - Display and operation units
- Hydraulic cylinders
- Large diameter bearing (swing ring)
- Swing and travel drives
- Ground Engaging Tools

Liebherr Service Tools

Liebherr service tools for excavator-specific maintenance ensure safe working conditions even when handling large components.

- A wide range of tools
- OEM certified solution
- Designed for Liebherr mining excavators
- Cost-efficient maintenance
- Easy and fast component replacement
- High operational safety

Customer Support

As a global mining solutions provider, Liebherr is more than a mining equipment manufacturer. Ensuring a permanent dialogue with each machine owner, Liebherr provides tailored assistance to customer specific projects and site requirements.

Proactive Service Supplying

Liebherr-Mining Network

With a truly global network composed of Liebherr affiliates and exclusive representatives, Liebherr's worldwide presence enables the highest level of service support irrespective of equipment location. Using advanced forecasting techniques and in-depth knowledge of regional populations, Liebherr service centers ensure that customers always have timely access to spare parts.

Customized Service Support

Liebherr tailored support solutions integrate components exchange and management agreements, service and maintenance on site or maintenance management agreements. Liebherr's highly-trained service personnel ensures preventive and scheduled maintenance tasks and provides emergency service.

Service Engineering Support

Machines and components reliability data are collected and monitored through the Liebherr maintenance management system. Liebherr's sales and service organization and product engineering groups provide fast and proactive support over the lifetime of the machine and promote mutual benefit for all involved.

Customer Value Management

Liebherr Mining Exchange Components

The Liebherr Mining Exchange Components program enables customers to minimize the total machine's Owning and Operating Cost while maintaining peak productivity and reliability. Through 15 Liebherr-certified component rebuild facilities worldwide, customers can take advantage of this program regardless of the equipment location or fleet size.

Complete Training Programs

The Liebherr Mining Training System provides operator and maintenance staff blended training sessions that encourage productive, cost-effective and safe mining operation. The Liebherr Mining Training System employs online learning programs, factory and on-site sessions and simulator training.

Components Exchange Program

Exchange and repair programs for components are conducted by Liebherr-certified rebuild facilities using the latest OEM rebuild specifications and the complete range of genuine Liebherr parts to ensure:

- Value: significantly reduce total cost of ownership
- Quality: guaranteed as-new performance and reliability
- Availability: global network of components rebuild facilities

From-Cradle-To-Grave Support

- Customer specific requirement study
- Collaborative solution development
- On-site machine assembly
- On-site machine settings
- Training program on / off site
- Machine performance monitoring
- Spare parts supply
- Parts remanufacturing facilities

Machine Access

Designed for safe access on the machine upperstructure via:

- Ladder and catwalk with handrails
- Walkway with slip-resistant surfaces
- Emergency ladder available near the cab

Safety

The Liebherr R 9100 provides uncompromising safety for operators and maintenance crew. As it is designed to be serviced from one side, the R 9100 allows effortless access facilities to the major service points for quick and safe maintenance. The R 9100's newly designed cab is reinforced for operator safety.

Service-Friendly Machine Design

Safe Service Access

The R 9100 is fitted with ergonomic access for fast and safe maintenance. All service points are within reach from one side and at machine level. The R 9100's upperstructure is accessible via a robust fixed ladder and integrates one large central platform equipped with slip resistant surfaces.

Easy Inspection and Component Replacements

All components have been located in areas that allow for effortless inspection and replacement. The R 9100 is equipped with robust hinged louvers for easy cleaning and maintenance. Numerous service lights are strategically located in the main service areas to sustain suitable maintenance conditions, day or night.

Secure Maintenance

The R 9100 eliminates hazards to ensure a safe environment for the service staff during maintenance. Emergency stops are strategically located in the cab and in the engine compartment for service crew accessibility. The battery switches are manually operated to safely isolate the battery power. The attachment can safely be lowered to the ground even if the engine is off.

Safety First Working Conditions

Safety-First Cab Design

In addition to its ergonomic design, the R 9100's cab provides maximum protection for the operator. The structure is composed of strong, low stress tubing and safety glass. The Falling Object Protection System (FOPS) and the front guard are available as an option for even more safety.

Engine Compartment Provision of Security

The engine compartment integrates a protection wall that separates the engine from the hydraulic pumps. This reduces the risk of hydraulic oil entering the engine compartment. The turbochargers and exhaust systems are heat shielded, and all the hydraulic hoses are made from a highly resistant material.

Machine Improved Visibility

The machine is easily visible even by night or in extremely dusty working environments thanks to:

- Reflective stripes on counter-weight
- Four long-range working halogen lights located on attachment and upperstructure (xenon in option)
- Travel alarm system with light and buzzer

Rear and Side Vision System

The machine ergonomically integrates a rear and side vision system composed of:

- One camera on counterweight
- One camera on right-hand side of uppercarriage
- One LCD color screen to display cameras view

Eco-Mode

The Eco-Mode can be manually selected by the operator when less power is not required according to job need for:

- An improved fuel efficiency
- Less load on the engine
- Less noise pollution
- Less dioxide carbon emissions

Environment

Liebherr considers the preservation of the environment as a major challenge for the present and future. Sustainability underpins Liebherr's machines; from the raw materials selection to manufacturing process employed. Liebherr provides solutions that allow customers to balance high performance with environmental consciousness.

Minimized Impact on Life

Low Fuel Consumption

Constant power regulation of the hydraulic system and engine output optimizes machine fuel efficiency, depending on the application. The automatic idling system reduces the engine speed when the machine is at rest. When less power is required, ''Eco-Mode'' can be selected via the machine monitor panel to reduce engine load, improve fuel efficiency and reduce carbon emissions.

Controled Emission Rejections

The R 9100 is powered by a high horsepower diesel engine which complies with the USA/EPA Tier 2 emission limits. This power drive makes the R 9100 cost effective without compromising productivity whilst reducing the machines impact on the environment.

Sustainable Design and Manufacturing Process

Extended Components and Fluids Lifetime

Liebherr is constantly working on ways to extend component life. Through the Exchange Components program, superior lubrication systems, and the reinforcement of parts under stress, Liebherr can reduce frequency of part replacement. The result minimizes environmental impact and lowers the overall cost of ownership.

Product Life-Cycle Management

Subject to the stringent European Program for the regulation of the use of chemical substances in the manufacturing process REACH*, Liebherr undertakes a global evaluation to minimize the impacts of hazardous materials.

*REACH is the European Community Regulation on chemicals and their safe use (EC1907/2006) It deals with the Registration, Evaluation, Authorisation and Restriction of Chemical Substances.

Automatic Idle Control

Electronic idle control of the engine results in:

- Less fuel consumption
- Less load on the engine
- Reduced emissions
- More comfort to the operator (reduced noise pollution)

Sustainable Manufacturing Process

With an ever-present green focus, Liebherr contributes to the sustainable development:

- Systematic risk analysis for new materials qualification
- Promoted recovery-waste management
- Controlled non-recyclable waste elimination
- Eco-friendly material selection (95% of material used on machine is recyclable)

Technical Data

Engine

1 Liebherr diesel engine	
Rating per ISO 9249	565 kW/757 HP at 1,800 rpm
Model	Liebherr D9512 (USA/EPA Tier 2 or fuel consumption optimized setting)
Type	V12 cylinder engine
Bore/Stroke	128/157 mm / 5.04/6.18 in
Displacement	24,24 l/1,479 in³
Engine operation	4-stroke diesel common-rail direct injection turbo-charged
Cooling	water-cooled, hydrostatic fan drive
Air cleaner	dry-type air cleaner with pre-cleaner, primary and safety elements, automatic dust discharge
Fuel tank	1.478 l/390 gal
Engine idling	electronically controlled
Electrical system	
Voltage	24 V
Batteries	4 x 170 Ah/12 V
Starter	24 V/2 x 8.4 kW
Alternator	24 V/140 A
RPM adjustment	brushless adjustment of engine output via rpm selector

Hydraulic System

Hydraulic pump for attachment and travel drive	3 Liebherr variable flow axial piston pumps
Max. flow	3 x 435 l/min. / 3 x 115 gpm
Max. pressure	350 bar/5,076 psi
Pump management	electronically controlled pressure and flow management with oil flow optimisation
Hydraulic pump for swing drive	1 Liebherr reversible swash plate pump, closed-loop circuit
Max. flow	420 l/min. / 111 gpm
Max. pressure	380 bar/5,511 psi
Hydraulic tank	1.000 l/264 gal
Hydraulic system	1.400 l/370 gal
Hydraulic oil filter	1 high pressure safety filter after each high pressure pump + extra-fine filtration of entire return flow with integrated by-pass filtration (15/5 µm) + dedicated leak-oil filtration
Hydraulic cooler	1 separated cooler, temperature controlled fan driven via 1 hydraulic piston motor
MODE selection	adjustment of machine performance and the hydraulics via a mode selector to match application
ECO	for economical operation (can be combined with fuel optimized setting)
POWER	for maximum digging power and heavy duty jobs

Hydraulic Controls

Power distribution	via monoblock control valves with integrated primary relief valves and secondary valves
Flow summation	to attachment and travel drive
Closed-loop circuit	for uppercarriage swing drive
Servo circuit	
Attachment and swing	proportional via hydraulic joystick levers
Travel	proportional via hydraulic pedals or removable hand levers
Shovel flap functions	proportional via hydraulic pedals

Electric System

Electric isolation	easy accessible battery isolators
Working lights	high brightness halogen lights: – 2 on working attachment – 1 on RHS of uppercarriage – 1 on LHS of uppercarriage Xenon or LED lights in option
Emergency stop switches	in the cab/in option in engine compartment
Electrical wiring	heavy duty execution in IP 65 standard for operating conditions of – 50 °C to 100 °C/ – 58 °F to 212 °F

Swing Drive

Drive by	2 Liebherr axial piston motors
Transmission	2 Liebherr planetary reduction gears
Swing ring	Liebherr, sealed single race ball bearing swing ring, internal teeth
Swing speed	0 – 6 rpm
Parking brake	wet multi-disc brakes, spring applied, hydraulically released

Uppercarriage

Design	torque resistant modular design upper frame
Attachment mounting	parallel length girders
Catwalks	large catwalk on the left-hand side

Technical Data

Operator's Cab

Cab	sound insulated, tinted windows. Front window armored glass, door with sliding window
Operator's seat	air suspended, body-contoured with shock absorber, adjustable to operator's weight
Joysticks	joystick levers integrated into armrest of seat, armrest adjusted to seat position
Condition monitoring	machine condition monitoring system with error reporting and operational information
Display	color LCD-display with low and high brightness settings
Rear vision system	camera installation on counterweight and right-hand side of the uppercarriage displayed over the LCD-display
Heating system	standard automatic air conditioning, combined cooler/heater, additional dust filter in fresh air/recirculated
Noise level (ISO 6396)	Diesel: L_{pA} (inside cab) = 73 dB(A) with oil/water fans at 70 % and AC fan at 65 %

Undercarriage

Version HD	heavy duty
Drive	Liebherr swash plate motors
Transmission	Liebherr planetary reduction gears
Travel speed	0 – 3,5 km/h / 0 – 2.17 mph
Track components	track pitch 280 mm/11.02 in, maintenance-free
Track rollers/ Carrier rollers	8/2 per side frame
Track pads	double grouser
Track tensioner	spring with grease tensioner
Parking brake	wet multi-discs (spring applied, pressure released)
Brake valves	integrated in main valve block

Central Lubrication System

Type	centralised manual lubrication system for the entire attachment/swing ring bearing (automatic system in option with 30 l/7.9 gal bulk container refillable via quick connection and grease filter) automatic Lincoln lubrication system for the swing ring teeth
Grease pump	1 Lincoln P203 (electric) pump for swing teeth lubrication
Capacity	8 l/2.1 gal bulk container for swing ring teeth
Refill	via quick connector, refill line with grease filter

Attachment

Type	box-type, combination of resistant steel plates and cast steel components
Hydraulic cylinders	Liebherr design
Pivots	sealed, low maintenance
Pivots bucket-to-stick bucket-to-link	O-ring sealed and completely enclosed
Hydraulic connections	pipes and hoses equipped with SAE flange connections

Dimensions

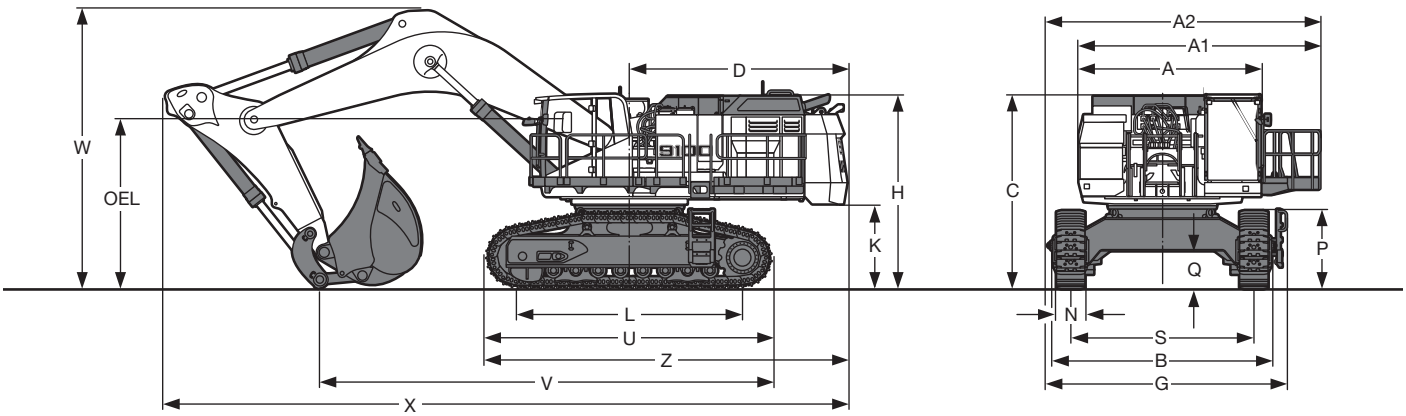

	mm/ft in
A	3.920/12’10”
A1	4.337/14’ 2”
A2	5.752/18’10”
B	4.780/15’ 8”
C	4.143/13’ 7”
D	4.630/15’ 2”
G	5.031/16’ 6”
H	4.114/13’ 5”
K	1.803/ 5’10”
L	4.810/15’ 9”
N	500/1’7” 600/1’11” 750/ 2’ 5”
P	1.663/ 5’ 5”
Q	812/ 2’ 7”
S	3.900/12’ 9”
U	6.107/20’
Z	7.683/25’ 2”
OEL	Operator’s Eye Level 3.533/11’ 7”

	Stick Length m/ft in	**Gooseneck Boom 7,60 m/24’11”** mm/ft in	**Gooseneck Boom 9,20 m/30’2”** mm/ft in
V	3,20/10’5”	9.660/31’8”	11.445/37’6”
	4,50/14’9”	–/–	9.930/32’6”
	5,60/18’4”	–/–	9.890/32’5”
W	3,20/10’5”	6.035/19’9”	6.210/20’4”
	4,50/14’9”	–/–	6.800/22’3”
	5,60/18’4”	–/–	7.550/24’9”
X	3,20/10’5”	14.560/47’9”	16.080/52’8”
	4,50/14’9”	–/–	15.385/50’5”
	5,60/18’4”	–/–	14.825/48’7”

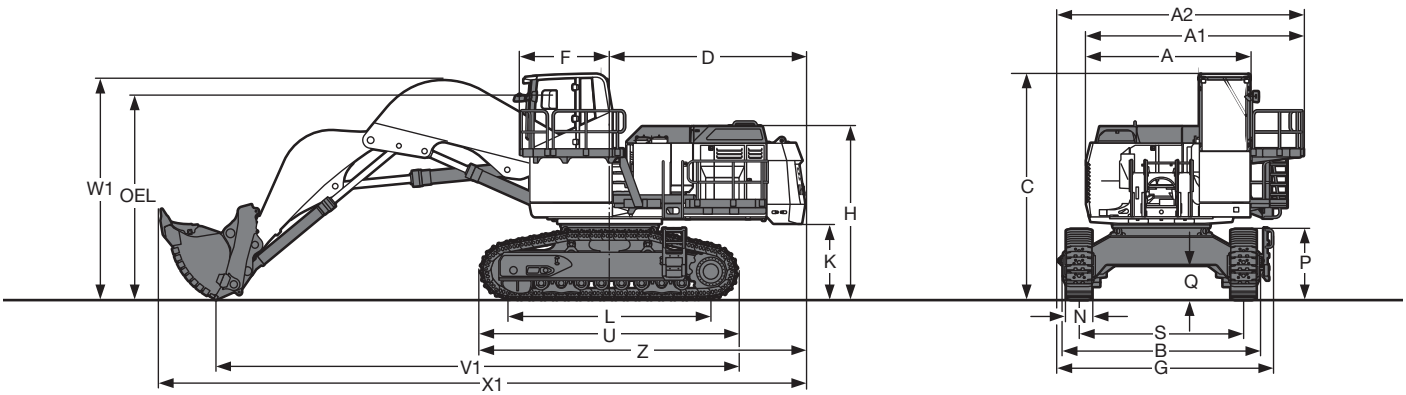

	mm/ft in
A	3.920/12’10”
A1	4.337/14’ 2”
A2	5.752/18’10”
B	4.780/15’ 8”
C	5.340/17’ 6”
D	4.630/15’ 2”
F	2.000/ 6’ 6”
G	5.031/16’ 6”
H	4.114/13’ 5”
K	1.803/ 5’10”
L	4.810/15’ 9”

	mm/ft in
N	500/1’7” 600/1’11” 750/ 2’ 5”
P	1.663/ 5’ 5”
Q	812/ 2’ 7”
S	3.900/12’ 9”
U	6.107/20’
V1	12.350/40’ 6”
W1	6.035/19’ 8”
X1	15.530/51’
Z	7.683/25’ 2”
OEL	Operator’s Eye Level 4.733/15’ 6”

Backhoe Attachment

with Gooseneck Boom 7,60 m/24’11”

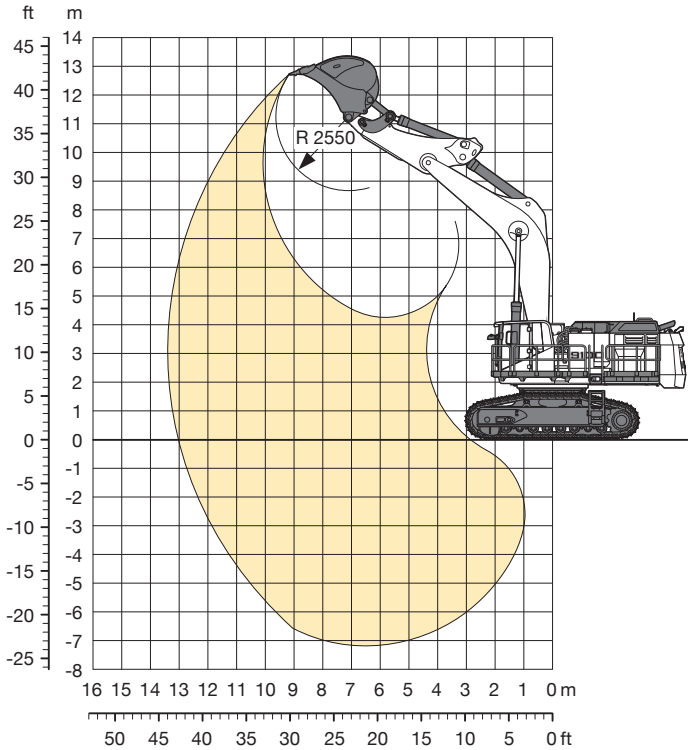

Digging Envelope

Stick length	m	3,20
	ft in	10’5”
Max. digging depth	m	7,15
	ft in	23’5”
Max. reach at ground level	m	13,00
	ft in	42’7”
Max. dump height	m	8,65
	ft in	28’4”
Max. teeth height	m	12,70
	ft in	41’7”
Max. digging force (ISO 6015)	kN	415
	lbf	93,296
Max. breakout force (ISO 6015)	kN	560
	lbf	125,893

Operating Weight and Ground Pressure

The operating weight includes the basic machine with gooseneck boom 7,60 m/24’11”, stick 3,20 m/10’5” and bucket 7,00 m³/9.2 yd³.

Undercarriage		HD	
Pad width	mm/ft in	600/1’11”	750/2’5”
Weight	kg/lb	108.500/239,200	109.615/241,650
Ground pressure *	kg/cm²/psi	1,72/24.40	1,39/19.72

* according to ISO 16754

Buckets

For materials classe according to VOB, Section C, DIN 18300		< 5	< 5	5 – 6	5 – 6	5 – 6	7 – 8	7 – 8	7 – 8
Typical operation according to VOB, Section C, DIN 18300		GP	GP	HD	HD	HD	XHD	XHD	XHD
Capacity ISO 7451	m³	8,50	7,70	7,70	7,00	6,20	7,00	6,00	5,50
	yd³	11.1	10.1	10.1	9.2	8.1	9.1	7.9	7.2
Suitable for material up to a specific weight of	t/m³	1,5	1,65	1,5	1,8	2,1	1,65	2,0	2,3
	lb/yd³	2,530	2,782	2,530	3,035	3,541	2,782	3,373	3,879
Weight	kg	7.100	6.900	7.560	7.200	6.700	8.110	7.420	7.130
	lb	15,653	15,212	16,667	15,873	14,771	17,879	16,358	15,719

GP: General purpose bucket with Liebherr Z90 teeth
HD: Heavy-duty bucket with Liebherr Z100 teeth
XHD: Heavy-duty rock bucket with Liebherr Z100 teeth

Backhoe Attachment

with Gooseneck Boom 9,20 m/30’2”

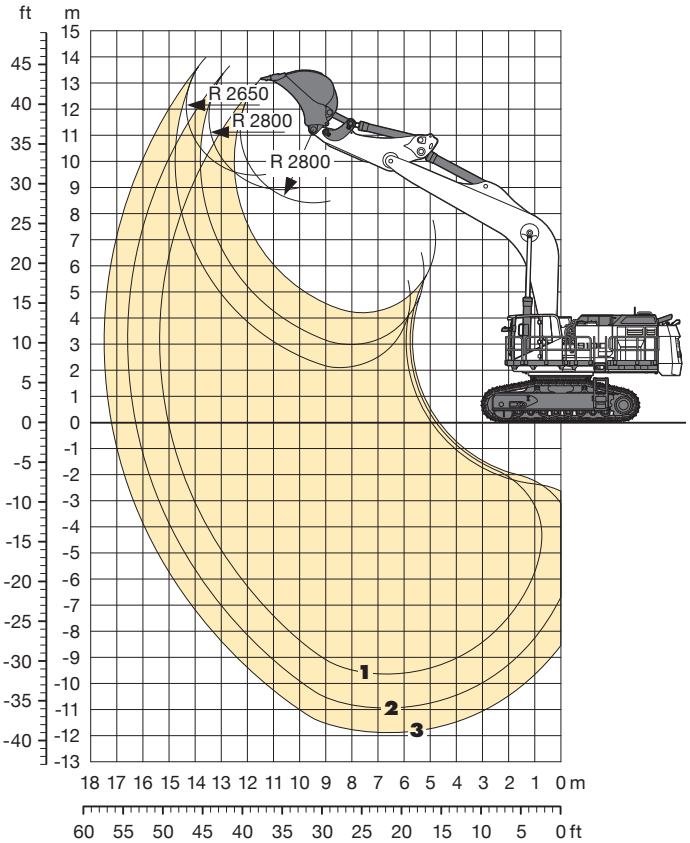

Digging Envelope

		1	2	3
Stick length	m	3,20	4,50	5,60
	ft in	10’5”	14’9”	18’4”
Max. digging depth	m	9,64	10,94	11,90
	ft in	31’7”	35’10”	39’
Max. reach at ground level	m	15,02	16,20	17,20
	ft in	49’3”	53’1”	56’4”
Max. dump height	m	8,40	8,90	9,40
	ft in	27’6”	29’2”	30’8”
Max. teeth height	m	13,16	13,60	13,90
	ft in	43’1”	44’6”	45’6”
Max. digging force (ISO 6015)	kN	410	330	285
	lbf	92,172	74,186	64,070
Max. breakout force (ISO 6015)	kN	530	530	530
	lbf	119,149	119,149	119,149

Operating Weight and Ground Pressure

The operating weight includes the basic machine with gooseneck boom 9,20 m/30’2”, stick 4,50 m/14’9” and bucket 4,20 m³/5.5 yd³.

Undercarriage		HD	
Pad width	mm/ft in	600/1’11”	750/2’5”
Weight	kg/lb	111.060/244,850	112.080/247,100
Ground pressure*	kg/cm²/psi	1,76/25.03	1,42/20.20

* according to ISO 16754

Buckets

For materials classe according to VOB, Section C, DIN 18300		< 5	5 – 6	5 – 6	5 – 6	5 – 6	5 – 6
Typical operation according to VOB, Section C, DIN 18300		GP	HD	HD	HD	HD	HD
Capacity ISO 7451	m³	6,20	5,50	5,20	4,20	3,50	2,90
	yd³	8.1	7.2	6.8	5.5	4.6	3.8
Suitable for material up to a specific weight of							
with stick 3,20 m	t/m³	1,2	1,5	1,8	2,0	2,2	–
with stick 10’5”	lb/yd³	2,024	2,530	3,035	3,373	3,710	–
with stick 4,50 m	t/m³	–	1,2	1,5	1,8	2,0	2,2
with stick 14’9”	lb/yd³	–	2,024	2,530	3,035	3,373	3,710
with stick 5,60 m	t/m³	–	–	1,2	1,5	1,8	2,0
with stick 18’4”	lb/yd³	–	–	2,024	2,530	3,035	3,373
Weight	kg	6.800	7.100	6.400	5.300	4.600	4.000
	lb	14,991	15,653	14,110	11,684	10,141	8,818

GP: General purpose bucket with Liebherr Z90 teeth
HD: Heavy-duty bucket with Liebherr Z100 teeth

Shovel Attachment

with Shovel Boom 5,30 m/17’4”

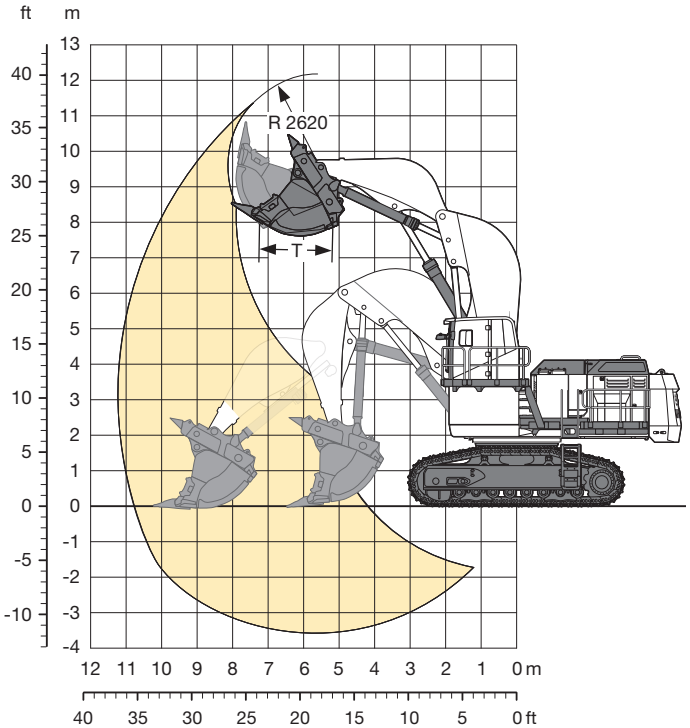

Digging Envelope

Stick length	3,70 m/12’1”
Max. reach at ground level	10,70 m/35’1”
Max. dump height	7,60 m/25’
Max. crowd length	3,70 m/12’1”
Bucket opening width T	2.000 mm/ 6’6”
Max. crowd force at ground level (ISO 6015)	545 kN/122,521 lbf
Max. crowd force (ISO 6015)	704 kN/158,265 lbf
Max. breakout force (ISO 6015)	585 kN/131,513 lbf

Operating Weight and Ground Pressure

The operating weight includes the basic machine with shovel attachment and a 7,00 m³/9.2 yd³ bucket.

Undercarriage		HD	
Pad width	mm/ft in	600/1’11”	750/2’5”
Weight	kg/lb	113.500/250,200	114.600/252,650
Ground pressure*	kg/cm²/psi	1,80/25.53	1,45/20.62

* according to ISO 16754

Bottom Dump Buckets

For materials classe according to VOB, Section C, DIN 18300		< 5	< 5	5 – 6	5 – 6	5 – 6	5 – 6	7 – 8	7 – 8	7 – 8
Typical operation according to VOB, Section C, DIN 18300		GP	GP	HD	HD	HD	HD	XHD	XHD	XHD
Capacity ISO 7546	m³	8,70	7,50	7,50	7,00	6,40	5,60	7,00	6,40	5,60
	yd³	11.4	9.8	9.8	9.2	8.4	7.3	9.2	8.4	7.3
Suitable for material up to a specific weight of	t/m³	1,3	1,7	1,6	1,8	2,0	2,4	1,5	1,8	2,2
	lb/yd³	2,192	2,867	2,698	3,035	3,373	4,047	2,530	3,035	3,710
Weight	kg	12.600	11.400	12.000	11.400	11.000	10.400	13.200	12.400	11.600
	lb	27,778	25,133	26,455	25,133	24,251	22,928	29,101	27,337	25,574
Wear kit level		I	I	II	II	II	II	III	III	III

GP: General purpose bucket with Liebherr Z90 teeth
HD: Heavy-duty bucket with Liebherr Z100 teeth
XHD: Heavy-duty rock bucket with Liebherr Z100 teeth

Level I: For non-abrasive materials, such as limestone, without flint inclusion, shot material or easily breakable rock, i.e. deteriorated rock, soft limestone, shale, etc.
Level II: For preblasted heavy rock, or deteriorated, cracked material (classification 5 to 6, according to DIN 18300)
Level III: For highly-abrasive materials such as rock with a high silica content, sandstone etc.

Optional Equipment

Undercarriage

Narrow track pad width (500 mm/1’7”)
Wide track pad width (750 mm/2’5”)
Removable side frames

Uppercarriage

Electric-powered refueling pump
Fully automatic greasing system
Increased fuel tank capacity (for 24h operation)
Xenon lighting kit (11 floodlights)
Grid protection for front floodlights
Semi-automatic swing brake with joystick control
Service Station with Wiggins/Banlaw/other brand name fast refilling system (excluding fuel)
Wiggins/Banlaw/other brand name counter plugs (service trucks)
Wiggins/Banlaw/other brand name fast refueling system
Wiggins/Banlaw/other brand name fast refueling system with Multiflo Hydro-Flo®

Hydraulics

Oil cooler protection filter

Engine

Fuel consumption optimized engine version (Tier non-certified)

Operator’s Cab

4-point seat belt
Cab elevation (1.200 mm/3’9”)
Cab pressurization
FOPS top guard
Operator comfort kit
Protective front grid

Attachment

Piston rod guard for bucket cylinder
Quick change coupling

Safety

Additional Xenon lighting with timer (main access)
Automatic fire fighting system (foam and powder)

Specific Solutions

Arctic kit –20 °C/– 4 °F
Arctic kit –30 °C/–22 °F
Arctic kit –40 °C/–40 °F

General

Maritime transport packaging

Printed in Germany by Schirmer RG-BK-RP LFR/SP 11003235-1-06.14_enGB-US All illustrations and data may differ from standard equipment. Subject to change without notice. All indicated loads are based in accordance with ISO 9248.

Liebherr-Mining Equipment Colmar SAS
49 rue Frédéric Hartmann, FR-68025 Colmar Cedex
☎ +33 369 49 20 00, Fax +33 369 49 23 18
www.liebherr.com, E-Mail: info.lec@liebherr.com
www.facebook.com/LiebherrMining